NOTES: (UNLESS OTHERWISE SPECIFIED)
1. ALL DIMENSIONS APPLY AFTER PLATING.
2. BREAK ALL SHARP EDGES AND REMOVE BURRS.

X-AXIS SPECIFICATIONS:
LINEAR STROKE: 15.0 mm
FORCE CONSTANT: 1.1 KgF/AMP
PEAK FORCE: 2.3 KGF @ 2.2 AMPS TOTAL (48 VDC)
CONTINUOUS FORCE: 1.1 KgF @ 1.0 AMP (48VDC)
COIL DC RESISTANCE: 24.5 ±10% OHMS @ 22°C
ENCODER RESOLUTION: 5 MICRON-METER
MOVING MASS: 130 gm

Y-AXIS SPECIFICATIONS:
LINEAR STROKE: 15.0 mm
FORCE CONSTANT: 1.2 KgF/AMP
PEAK FORCE: 2.6 KgF @ 2.2 AMPS TOTAL(48 VDC)
CONTINUOUS FORCE: 1.2 KgF @ 1.0 AMP (48VDC)
COIL DC RESISTANCE: 21 ±10% OHMS @ 22°C
ENCODER RESOLUTION: 5 MICRON-METER
MOVING MASS: 220 gm

TOTAL MASS: 1650 gm

REVISIONS				
REV	DATE	ECN	DESCRIPTION	APP
A	10/28	2956	INITIAL RELEASE	SMH
B	3/17/05	3457	UPDATED CURRENT DESIGN	CAW
C	10/9/06	4049	CHANGE DOWELS HOLES TO CLEARANCE**	NI
D	4/13/07	4163	ADD MISSING DIMS***	NI

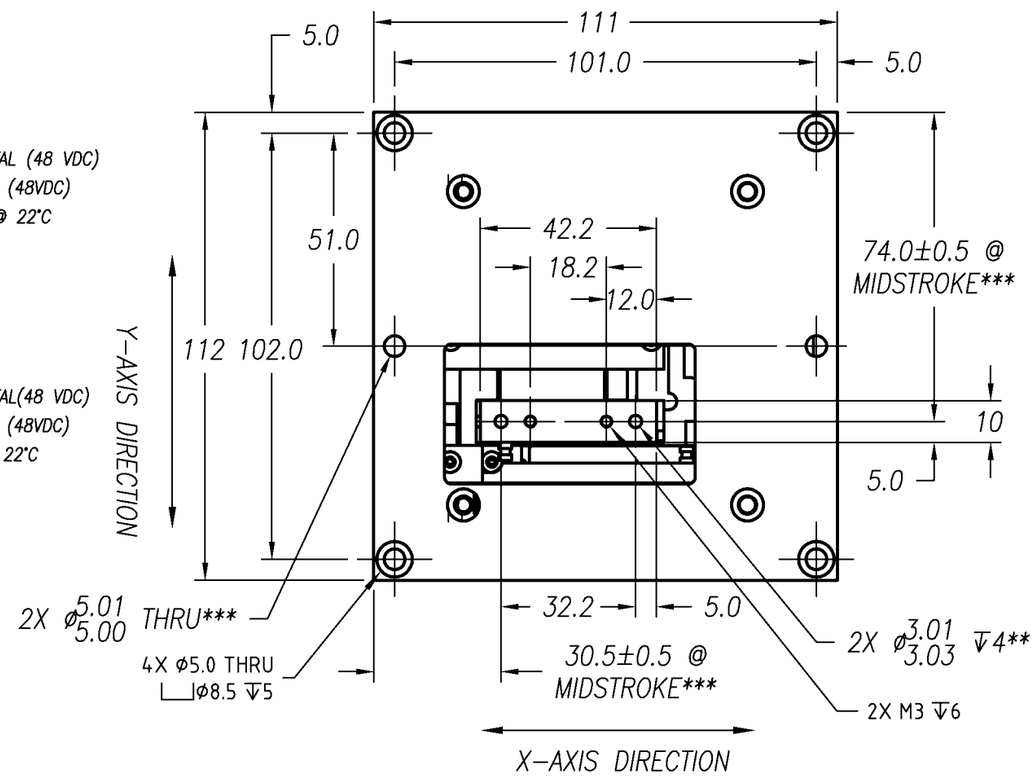

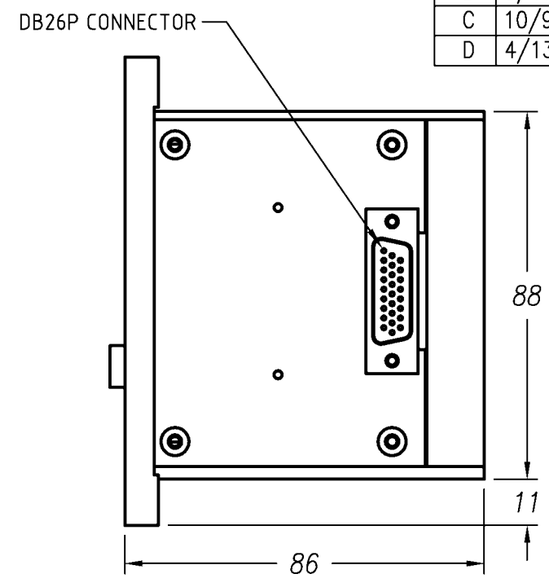

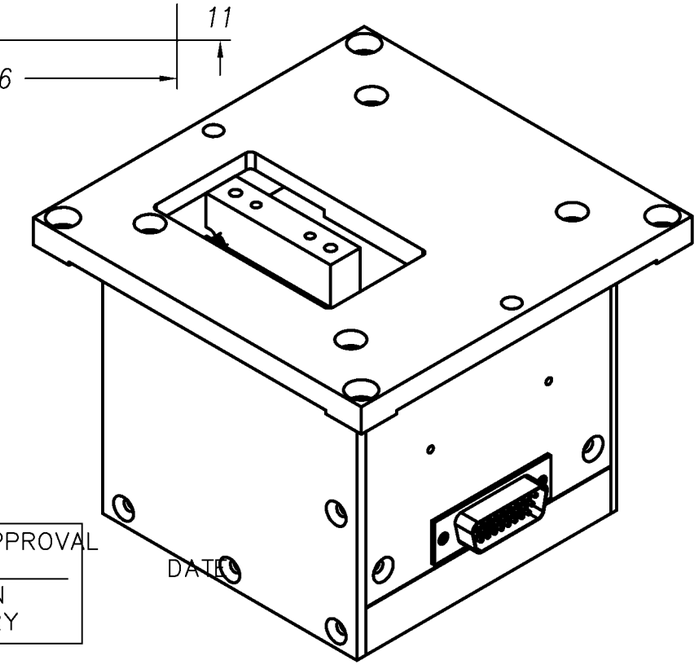

DB-26P PINOUT

1	NC
2	NC
3	NC
4	+5 VDC
5	+5 VDC
6	B- Y-AXIS
7	B+ Y-AXIS
8	A- X-AXIS
9	A+ X-AXIS
10	NC
11	NC
12	COIL+ X-AXIS
13	COIL+ Y-AXIS
14	COIL- X-AXIS
15	A- Y-AXIS
16	A+ Y-AXIS
17	B- X-AXIS
18	B+ X-AXIS
19	COIL- Y-AXIS
20	NA
21	5V RTN
22	5V RTN
23	Z- Y-AXIS
24	Z+ Y-AXIS
25	Z- X-AXIS
26	Z+ X-AXIS

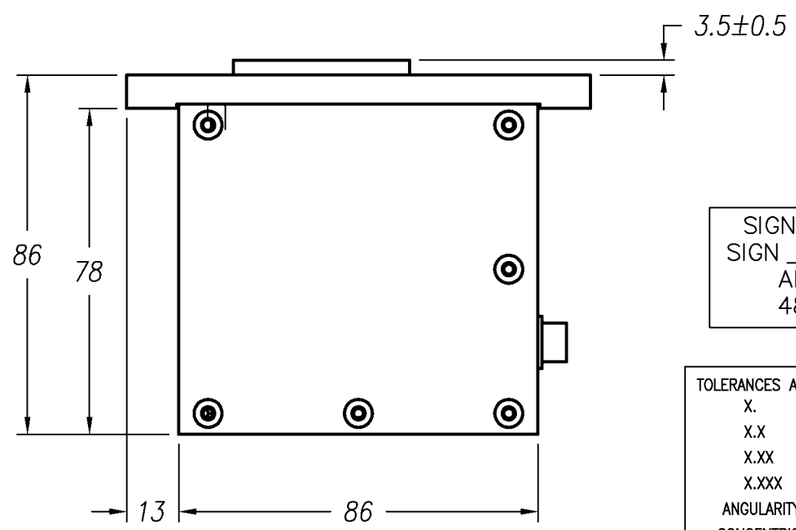

SIGNATURE NEEDED FOR ORDER APPROVAL
SIGN _____ _____
DATE
APPROVAL NOT RECEIVED WITHIN 48 HOURS MAY AFFECT DELIVERY

TOLERANCES ARE: X. ± 0.50; X.X ± 0.1; X.XX ± 0.05; X.XXX ±; ANGULARITY ± 0.1°; CONCENTRIC ± 0.01; ROUNDNESS ± 0.05; EDGE BREAK 0.2 MAX; CHAMFER 0.1 MAX	MATERIAL: ALUMINUM 6061 T-6	SMAC			REF. NUMBER LXY15-015
	HEAT TREAT: ____/____RC ____DEEP	DESIGNED BY: CHIA CHEN	DATE: 4/30/03	CHECKED BY:	DATE: / CONTRACT: STD
		DRAWN BY: N. ITAKURA	DATE: 4/13/07	APPROVED BY:	DATE:
	MACHINE FINISH: EXCEPT NOTED. √	PART NAME: LXY15-015-7 OUTLINE DRAWING			SHEET NUMBER: 1 OF 1
FILE NAME: LXY15-015-7_D	PROTECTIVE FINISH ELECTROLESS NICKEL	SCALE: NONE	DWG SIZE: B	PART NUMBER: LXY15-015-7	REVISION: D
	SPEC. NUMBER:	DO NOT SCALE DWG			